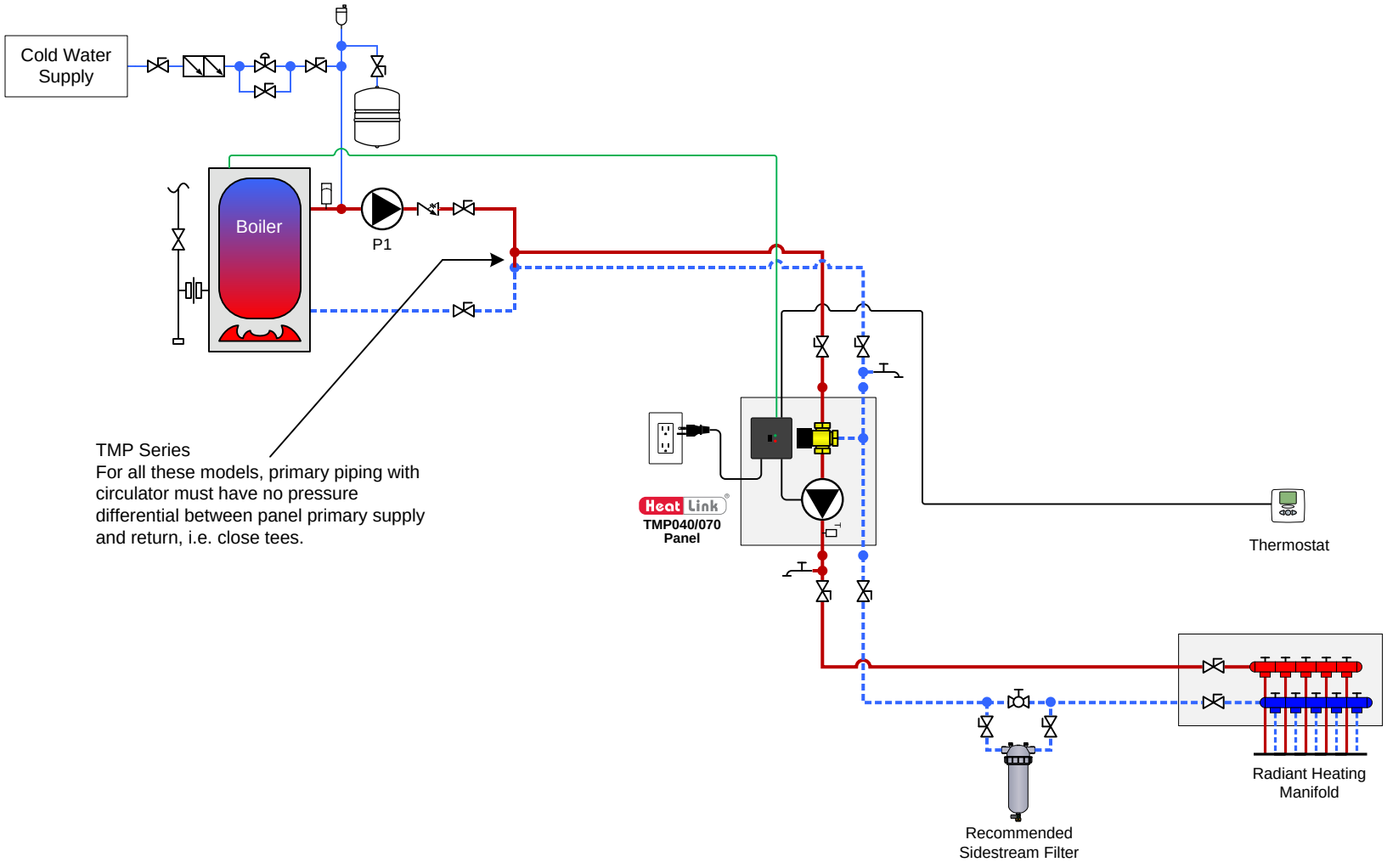

Heat Link®
www.heatlinkgroup.com
1-866-661-5332

Notes:
- Drawings are for HeatLink suggested system layout only! User must determine if system layout will work for their particular application.
- Air vents, expansion tanks, pressure relief valves, etc. for heat source as per local codes.
- Use isolation ball valves for all circuits and components.
- Local codes, regulations, and authorities have final jurisdiction.

Heat Source: Boiler
Panel(s): TMP Series
Heat Load(s): Radiant Heating – Single Zone

Date: 2013-05-21

Schematic #: **SCH-TMP-M003**
Rough-in wiring see: SCH-MRIB-R001
Wiring detail see: SCH-TMP-E003