#40234 User Guide
StatLink® 4 Zone Expansion Module

Electrical drawing for one zone:

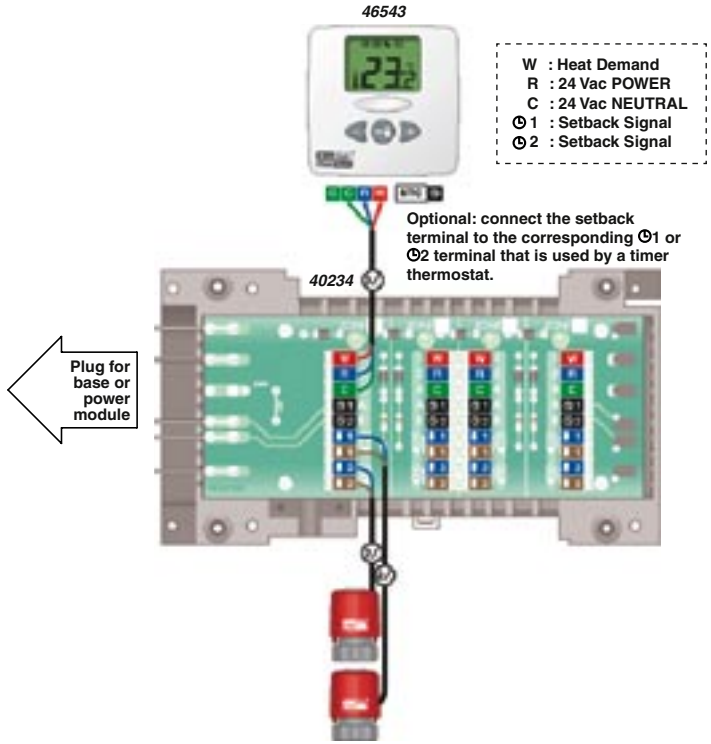

Mechanical drawing

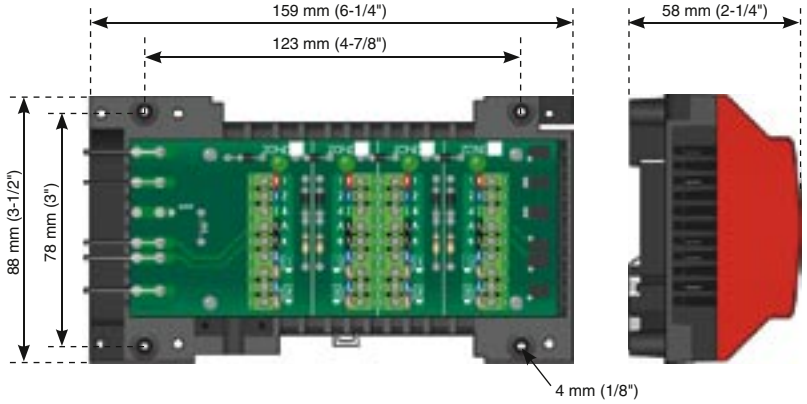

#40234 User Guide
StatLink® 4 Zone Expansion Module



Description

The StatLink® 4 zone expansion module connects to the StatLink® 6 zone base module, allowing 4 more room thermostats to connect to their corresponding actuators.

Technical Data

StatLink® 4 zone expansion module #40234	
Operating voltage:	24Vac ±10%
Operating temperature:	0 to 50°C (32 to 122°F)
Current rating	2.5A (max. 60VA transformer)
Max actuators (transformer 60VA):	20
Max actuators / Zone (15W):	4
Contact:	Triac
Dimensions:	159 × 88 × 58mm (6-1/4" × 3-1/2" × 2-1/4")

L640234 - June 13, 2007

HeatLink and StatLink are registered trademarks of HeatLink Group Inc.

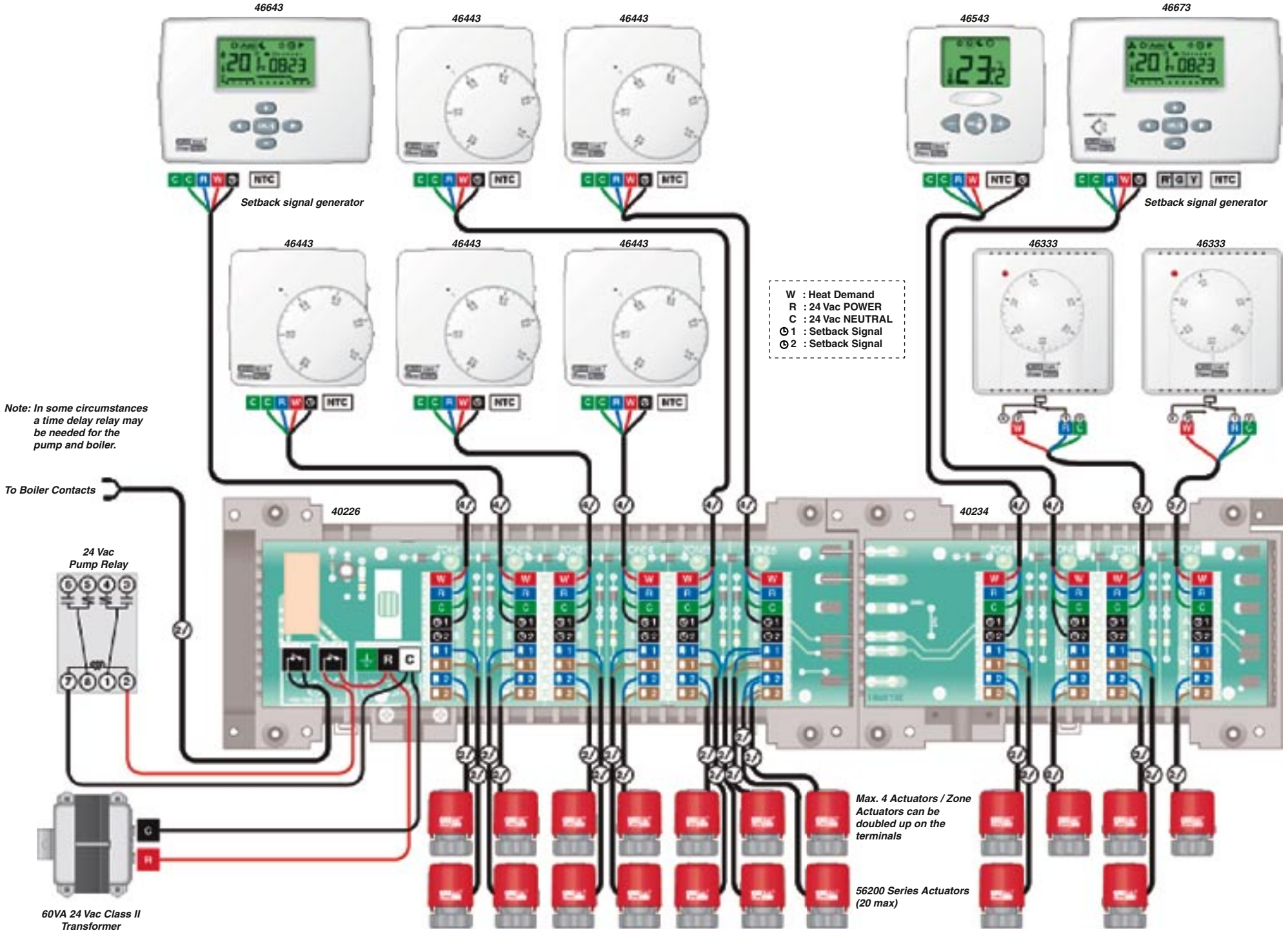
46643
46443
46443
46543
46673
Setback signal generator
Setback signal generator
46443
46443
46443
46333
46333
W : Heat Demand
R : 24 Vac POWER
C : 24 Vac NEUTRAL
1 : Setback Signal
2 : Setback Signal
Note: In some circumstances a time delay relay may be needed for the pump and boiler.
To Boiler Contacts
40226
40234
24 Vac Pump Relay
Max. 4 Actuators / Zone Actuators can be doubled up on the terminals
56200 Series Actuators (20 max)
60VA 24 Vac Class II Transformer